BB02-2F	CUSTOMER PRODUCT SPECIFICATION SHEET	RoHS Compliant

BB02-2F :- 2.00x2.0mm (0.079"x0.079") PIN HEADER, DUAL ROW, U TYPE, THROUGH HOLE, 02 TO 80 CONTACTS

SPECIFICATIONS

CURRENT RATING	2 AMP
VOLTAGE RATING	150V AC/DC
CONTACT RESISTANCE	20m OHMS MAX..
INSULATOR RESISTANCE	5000 MEGOHMS MIN.
DIELECTRIC WITHSTANDING	500 V AC/MINUTE
OPERATING TEMPERATURE	-40°C TO +105°C
CONTACT MATERIAL	BRASS
INSULATOR MATERIAL	THERMOPLASTIC, UL 94V-0 STANDARD : NYLON 6T
PLATING	GOLD, TIN, OR SELECTIVE OVER 30-50U" NICKEL
SOLDERABILITY:	IR REFLOW: 260°C FOR 10 SEC WAVE: 230°C FOR 5-10 SEC MANUAL SOLDER: 350°C FOR 3-5 SEC

NOTES:
1. BULK PACKAGE IN BAG.

MATES WITH: -

BB02-GH	BB02-GT
BB02-GK	BB02-GY
BB02-GL	BB02-GZ
BB02-GM	BB02-RG
BB02-GP	BB02-RJ
BB02-GQ	BB02-RX

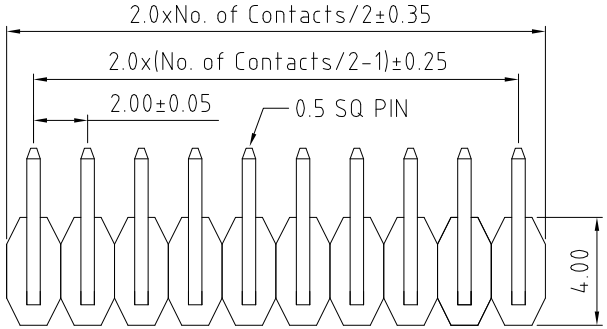

(EXAMPLE OF 20 CONTACTS PART)

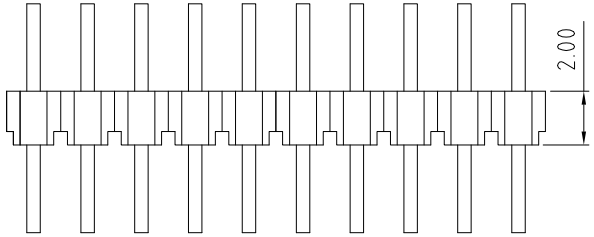

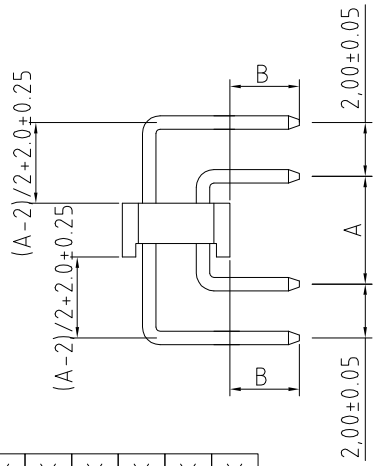

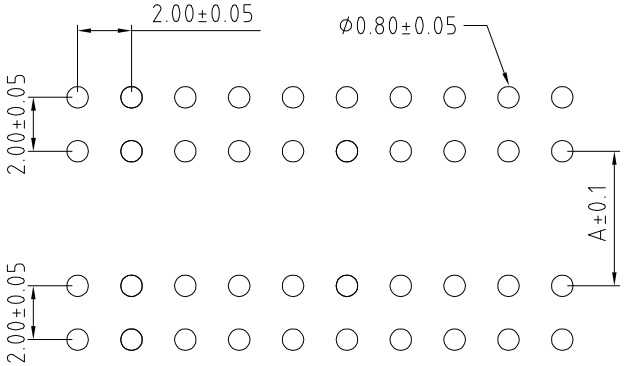

RECOMMENDED PCB HOLE LAYOUT

HOW TO ORDER

B B 0 2 - 2 F X X 1 - X 0 1 - X X X X X X

NO. OF CONTACTS:
02 TO 80

CONTACT PLATING OPTIONS :
K = GOLD FLASH (STANDARD)
T = BRIGHT TIN
M = MATT TIN
P = 10U" GOLD ALL OVER
Q = 15U" GOLD ALL OVER
R = 30U" GOLD ALL OVER

PIN LENGTH A (1/10mm)
SPECIFY PIN LENGTH
STANDARD = 050 = 5.0mm
1 MINIMUN = 040 = 4.0mm
MAXIMUM = 200 = 20.0mm
TOL.: ±0.25mm

PIN LENGTH B (1/10mm)
SPECIFY PIN LENGTH
STANDARD = 026 = 2.6mm
1 MINIMUM = 020 = 2.0mm
MAXIMUM = 150 = 15.0mm
TOL.: ±0.25mm

REV	DATE & DRN	
1.0	11/05/'11 - NYW	RELEASE
1.1	17/05/'11 - NYW	ADD MIN. & MAX. LENGTH.
1.2	06/07/'11 - NYW	ADD NOTE 2.
1.3	27/02/'13 - NYW	AMEND PLATING OPTIONS.
1.4	13/05/'13 - NYW	ADD MATING HALVES.

Scale: 5:1	THIRD ANGLE	Unstated Tolerances: X. ± 0.30, .X ± 0.25, .XX ± 0.15, .XXX ± 0.10	Material SEE NOTE
Drawn: NYW			
App'd: XXXX	Title PIN HEADER		NOT TO SCALE
Date: 13 MAY '13	Revision: 1.4		Unit: mm

GRADCONN
www.gradconn.com

© THIS DRAWING IS CONFIDENTIAL AND MUST NOT BE COPIED OR DISCLOSED WITHOUT WRITTEN CONSENT

Type: BB02-2F
BB02-2F
Drawing Number:
Sheet 1 of 1
Drawing © E and O E