RFCT-SMA122-F13	CUSTOMER PRODUCT SPECIFICATION SHEET	RoHS Compliant

RFCT-SMA122-F13: SMA STRAIGHT BULKHEAD JACK WITH O-RING RATED TO IP68/69K, FOR Ø1.13MM CABLE, WITH SUS316 STAINLESS STEEL BODY, 6GHz

Material and Plating:
1. Barrel: Brass, Gold Plated.
   Sleeve: Brass, Gold Plated.
   Gasket: Silicone Rubber, Color: Red.
   Pin: Brass, Gold Plated.
   Pin A: Phosphor Bronze, Gold Plated.
   Insulator: Teflon.
   Body: SUS316, Passivated.
   O-ring: EPDM, Color: Black.
2. Washer: SUS316.
3. Nut: SUS316, Passivated.

Environmental:
A. Tested to:
   i. IP6x - Dust tight - no particle ingress.
   ii. IPx8 Waterproof for 48 hours at 1 meter underwater.
   iii. IPx9K Water spray, 14-16L per minute, at 8,000 ~ 10,000 kPa, at 100-150mm distance for 30 seconds.

Notes:
1. Please use the recommended torque forces for stainless connectors. This is published on Gradconn.com resources page.

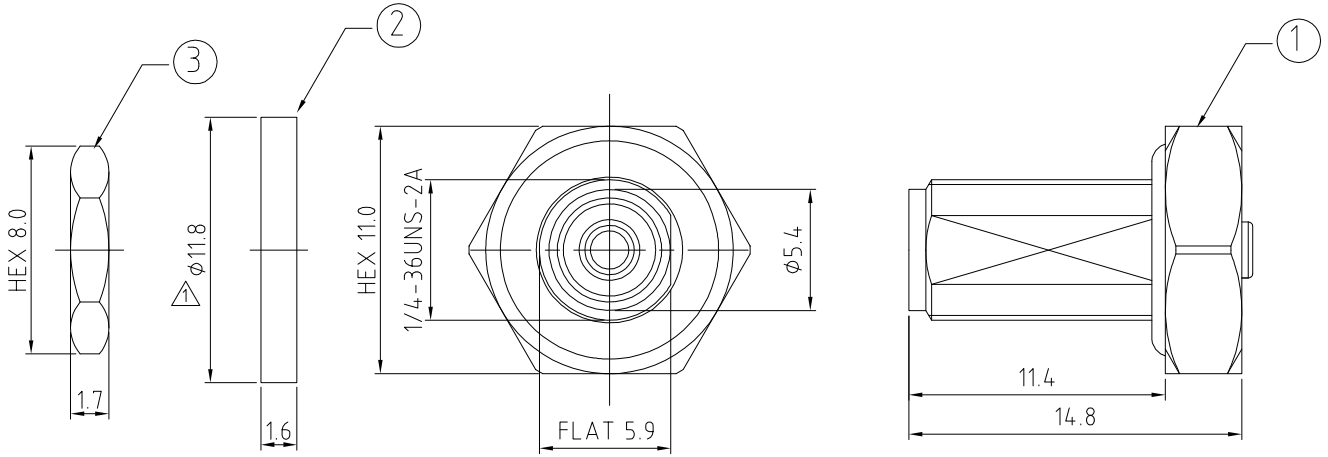

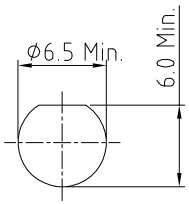

RECOMMENDED SMA MOUNTING HOLE
MAX. PANEL THICKNESS: 2.2MM

HOW TO ORDER

RFCT-SMA122-F13 - 1

O-RING MATERIAL:
1 = EPDM, COLOR: BLACK (STANDARD)

REV.	DATE & DRN	
10	21/04/'23 - NYW	RELEASE
11	22/05/'23 - NYW	BODY DESIGN CHANGE TO TIP TO FLAT.
12	10/07/'23 - NYW	AMEND WASHER DIAMETER.
13	02/08/'23 - NYW	UPDATE IP RATING TO 69K.

Scale: NTS	THIRD ANGLE	Unstated Tolerances: .X ±0.2, .XX ±0.2, .XXX ±0.2, ANGLES N/A	NAUTILUS IP67/68 Rated Cables
Drawn: NYW			GRADCONN www.gradconn.com
App'd: XXX	Title SMA BULKHEAD JACK		
Date: 2 AUG. '23	Revision: 1.3	Unit: mm	

© THIS DRAWING IS CONFIDENTIAL AND MUST NOT BE COPIED OR DISCLOSED WITHOUT WRITTEN CONSENT

Type: RFCT-SMA122
RFCT-SMA122-F13
Drawing Number:
Sheet 1 of 1
Drawing © E and O E